JC Power

AC Induction Motor

www.jcmotor.com.tw

第二版

COMPANY INTRODUCTION

- **1980** 創立【佳晟】品牌 Founded Jia Cheng Electric Co., LTD
- **1998** 感應電動機測試檢驗台 Testing system of induction motor
- **2001** 通過TUV取得CE認證 Obtain CE certificate by TUV
- **2009** 廠房擴建二千餘坪 Expanded plant by more 6610 square meters
- **2010** 同步伺服馬達誕生 Production of permanent-magnet synchronous motors
- **2010** 通過ISO-9001 Obtain ISO-9001 certificate by TUV
- **2011** 感應伺服馬達誕生 Production of servo motors
- **2012** 變頻馬達誕生 Production of inverter motors
- **2012** 通過TUV取得CE認證(EN60034-1:2010)版 Obtain CE certificate by TUV (EN60034-1: 2010)
- **2014** 主軸伺服馬達誕生 Production of spindle servo motors
- **2015** 高扭力DD馬達誕生 Production of high torque DD motors
- **2016** 直驅式分度盤 Direct Driver Rotary Table
- **2017** 通過TUV取得IE3認證 Obtain IE3 certificate by TUV
- **2020** JSM.JPM.DDM 全系列通過SGS取得CE認證 JSM,JPM,DDM Obtain CE certificate by SGS
- **2024** IE3 AC感應馬達 IE3 AC Induction Motor
- **2024** 伺服液壓節能系統 Hydraulic Energy Saving Servo-System

佳晟永遠秉持著顧客至上以及基本的四大原則：**「品質、服務、效率、創新」**的態度，為客戶提供多樣化的產品與服務。因此，在累積多年油壓馬達設計與製造的經驗後，持續朝向高效率與省能源的研發目標邁進，為客戶提供全系列完整的油壓馬達產品。有了紮實的技術團隊讓佳晟在商場上獲得良好的口碑，再次證明佳晟的實力與客戶的信賴。

佳晟為了因應廣大客戶需求，於2009年1月擴建廠房二千餘坪，並以ISO-9001品質管理系統作為管理工具核心，有效整合管理、財務、營業、研發、製造和品管各部門，部門間相互協調與配合，成為頂尖的服務團隊。此外於2010年起佳晟著手開發JPM同步伺服馬達、JVM感應伺服馬達、JSM主軸伺服馬達、DDM高扭力DD馬達及IE3感應馬達，正式朝向綠能產業的旅程，邁向另一個新紀元。

We maintain that customer first and have abided by its founding values of "QUALITY, SERVICE, EFFICIENCY, and INNOVATION". We can provide customers with a variety of products and services. Accumulated years of experience in the design and manufacture of the hydraulic motor, we still continue to develop high efficiency and energy saving products for greener. We not only offer a range of hydraulic motors but also make it personalization and customization. Thus ensuring that Jia Cheng will be prove quality and customers reliable.

Base on the customers satisfaction and development project, Jia Cheng has received ISO 9001 quality system certification. This system serves as a tool for management, financial, business, research and development, manufacturing and product quality. In addition to improve the management constantly and innovate design continuously, it helps coordination and cooperation between every department. On the other hand, this system gain trust and competitive edge on the market, and enable the company to reach their goals in sustained development. Jia Cheng expanded plant by more 6610 square meters in January 2009. And Jia Cheng developed synchronous servo motors (JPM), induction servo motors (JVM), spindle servo motors (JSM), high torque DD motors(DDM) and IE3 induction motors(ACH). We will toward environmental protection and energy conservation for new journey.

www.jcmotor.com.tw

馬 達 規 格
Specification

1	2	3	4	5	6	7	8	9	10	11
H	H	A	0	1	-	U	-	0	0	1

1 馬達型式【Type】

H	油壓型【Hydraulic】
B	標準型【Standard】

2 馬達外觀【Appearance】

H	臥式【Horizontal】
V	立式【Vertical】

3 馬達材質【Material】

A	鋁體【Aluminum】
S	銑體【Cast Iron】
F	鐵體【Iron】

4～5 馬達類別【Classification】

01	一般型【General】
02	長嘴型【Long Coupling】
03	浸油【Oil - immersed】
04	油路板【Manifold Block】
05	升降設備【Lifting equipment】
06	冷卻系統【Cooling system】
07	特殊【Special】

7 接線盒位置【Terminal Box Position】

R	正向【General】
U	在上【Upside】
L	反向【Opposite】

12 搭配泵浦【Pump】

P16	P08、P16、P22
P36	P36、P46
30L	30L
15L-F	15L-F
...	...

9~11 流水號【Serial Number】

IE1 銘牌樣式【Nameplate Style】

3 - PHASE
INDUCTION MOTOR

TYPE	100L	POLES	4
OUTPUT	3 HP	2.2 KW	
VOLTS	220 / 380	RATING	CONT
AMPS	9 / 5.2	INS.CLASS	F
R.P.M.	1420 / 720	HEAT	72℃
Hz	50 / 60	WEIGHT	32 kg
DATE	2020.01.01	SPECIFICATION	30L
SER.NO.	HHS01-R-001		

JIA CHENG ELECTRIC CO.,LTD.
MADE IN TAIWAN

IE3 銘牌樣式【Nameplate Style】

3 - PHASE
INDUCTION MOTOR

TYPE	100L	POLES	4
OUTPUT	3 HP	2.2 KW	
VOLTS	220 / 380	DATE	2020.01.01
AMPS	8.6 / 5.0	INS.CLASS	F
R.P.M.	1740	HEAT	72℃
Hz	60	WEIGHT	37 kg
EFF.(%)	89.5	SPECIFICATION	30L
IE CODE	IE3	SER.NO.	HHS01-R-001

JIA CHENG ELECTRIC CO.,LTD.
MADE IN TAIWAN

公司簡介 Introduction

經營理念 Management Philosophy

編碼原則 Model Code

目錄 Contents

七大產品

搭配各種泵浦尺寸 With Various Pump Size 01-04

ACH IE1 ACH感應油壓馬達 直結型(臥式) 05-06
ACH Induction Hydraulic Motor - Direct Drive(Horizontal)

ACH IE3 ACH感應油壓馬達 直結型(臥式) 07-08
ACH Induction Hydraulic Motor - Direct Drive(Horizontal)

ACH IE1.IE3 ACH感應油壓馬達(接線盒在上型) 09-10
ACH Induction Hydraulic Motor - Terminal Box On Motor

ACH IE1 ACH感應油壓馬達 長嘴型(臥式) 11-12
ACH Induction Hydraulic Motor - Long Coupling(Horizontal)

ACH IE3ACH感應油壓馬達 長嘴型(臥式) 13-14
ACH Induction Hydraulic Motor - Long Coupling(Horizontal)

ACV IE1ACV感應油壓馬達 直結型(立式) 15-16
ACV Induction Hydraulic Motor - Direct Drive(Vertical)

ACV IE3ACV感應油壓馬達 直結型(立式) 17-18
ACV Induction Hydraulic Motor - Direct Drive(Vertical)

ACH IE1.IE3 ACH 感應馬達 標準型(臥式) 19-20
ACH Induction Motor - Standard (Horizontal)

ACV IE1.IE3 ACV感應馬達 標準型(立式) 21-22
ACV Induction Motor - Standard (Vertical)

50HZ 滿載電流特性表 23
Full Load Current Characteristics

60HZ 滿載電流特性表 24
Full Load Current Characteristics

配線圖 Wiring Diagram 25

TFP

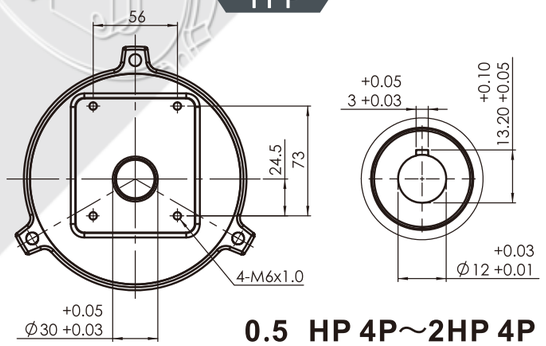

0.5 HP 4P～2HP 4P
0.25HP 6P～1HP 6P

1A

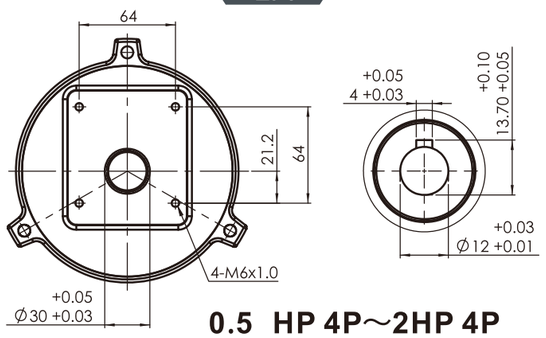

0.5 HP 4P～2HP 4P
0.25HP 6P～1HP 6P

TSP

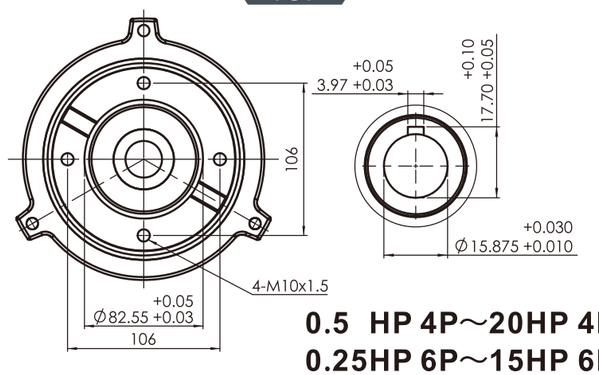

0.5 HP 4P～20HP 4P
0.25HP 6P～15HP 6P

DS

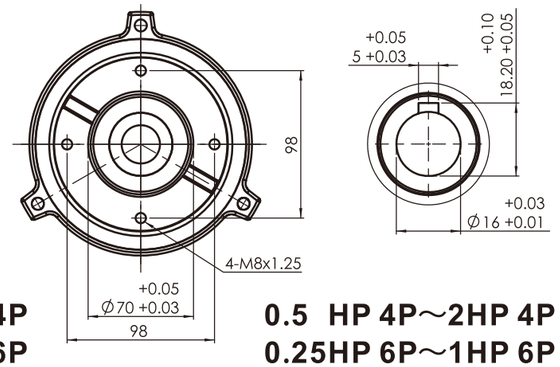

0.5 HP 4P～2HP 4P
0.25HP 6P～1HP 6P

PA

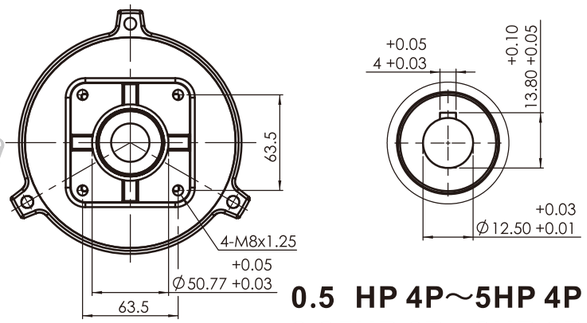

0.5 HP 4P～5HP 4P
0.25HP 6P～3HP 6P

P16

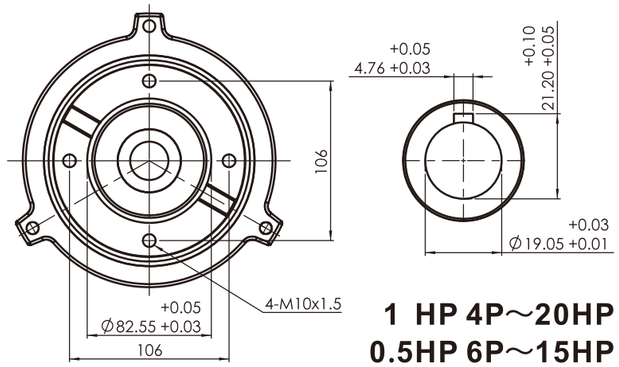

1 HP 4P～20HP 4P
0.5HP 6P～15HP 6P

P1

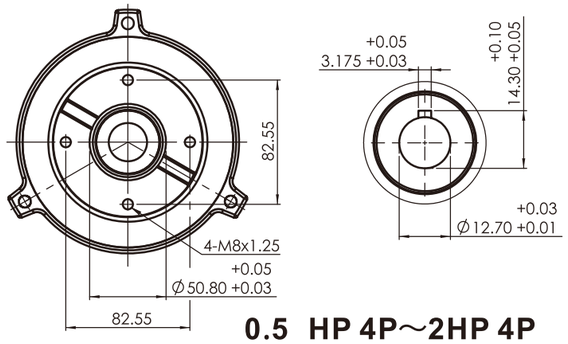

0.5 HP 4P～2HP 4P
0.25HP 6P～1HP 6P

15L

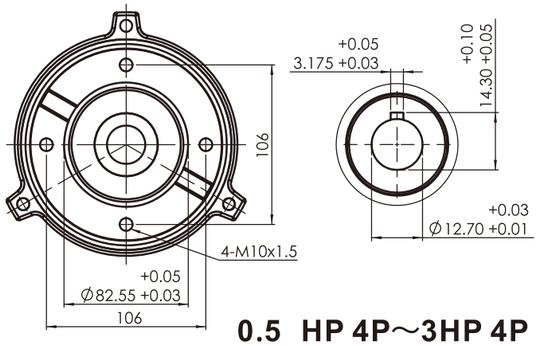

0.5 HP 4P～3HP 4P
0.25HP 6P～2HP 6P

30L

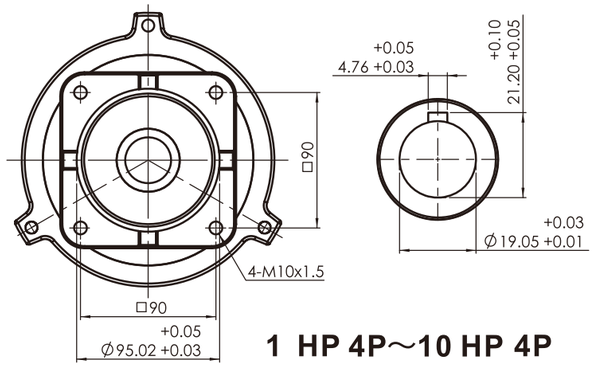

1 HP 4P～10 HP 4P
0.5HP 6P～7.5HP 6P

DEG4

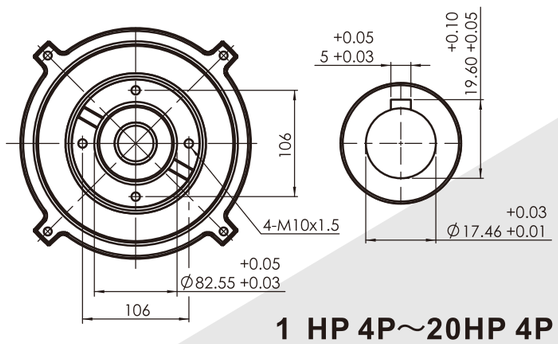

1 HP 4P～20HP 4P
0.5HP 6P～15HP 6P

由於本產品持續開發中，因此本公司保留隨時修改產品的設計、特性或是規格變更的權利，恕不另行通知。

Due to we continue to develop the products, we reserve the right to modify or improve the designs, features or specifications of our product at any time without notice.

PB

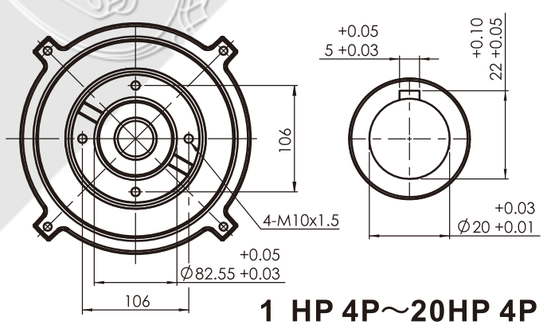

1 HP 4P～20HP 4P
0.5HP 6P～15HP 6P

P36

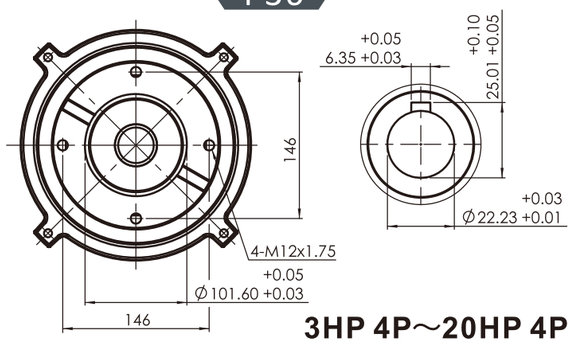

3HP 4P～20HP 4P
2HP 6P～15HP 6P

VP6F-F

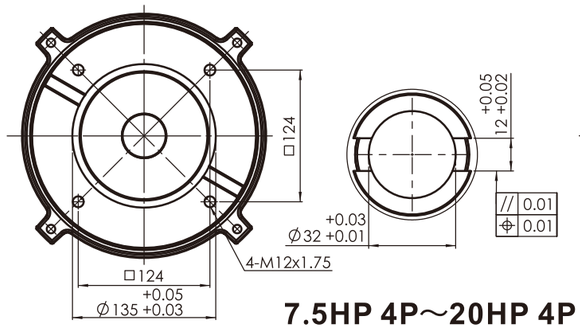

7.5HP 4P～20HP 4P
5 HP 6P～15HP 6P

VQ35

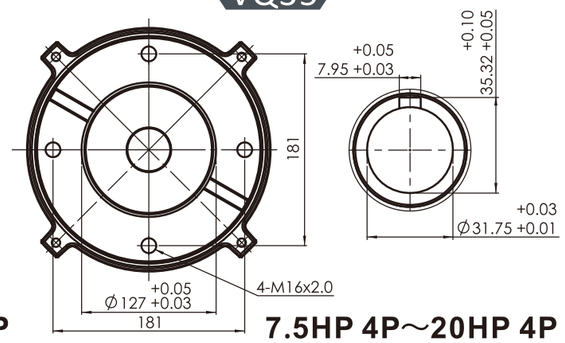

7.5HP 4P～20HP 4P
5 HP 6P～15HP 6P

50T

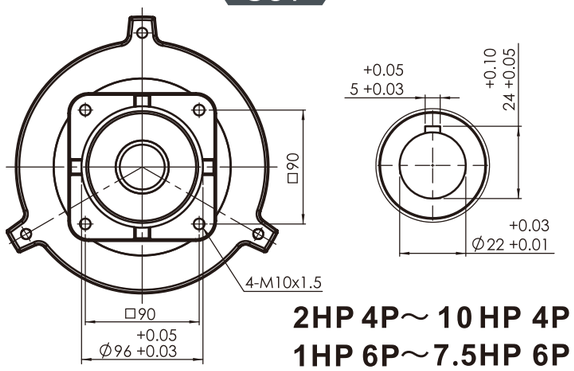

2HP 4P～ 10 HP 4P
1HP 6P～7.5HP 6P

150T

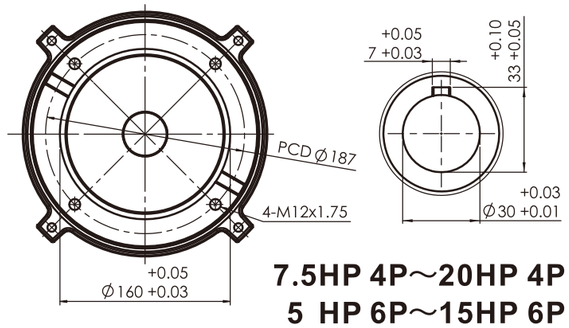

7.5HP 4P～20HP 4P
5 HP 6P～15HP 6P

PV2R2

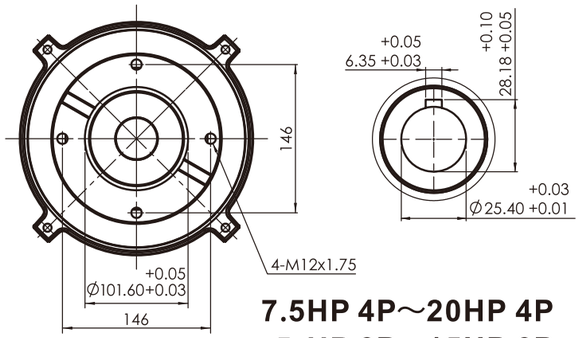

7.5HP 4P～20HP 4P
5 HP 6P～15HP 6P

VP6F

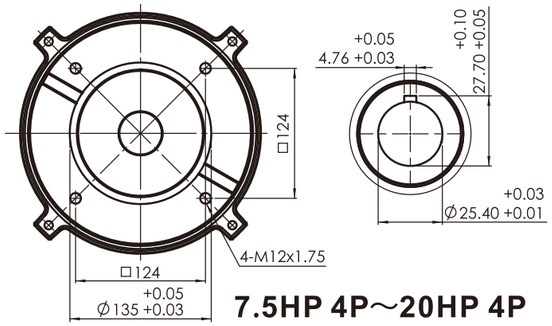

7.5HP 4P～20HP 4P
5 HP 6P～15HP 6P

30L-F

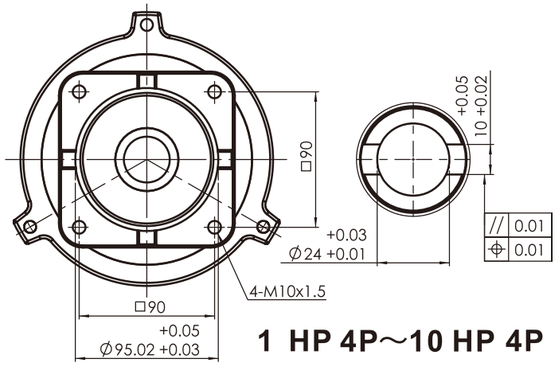

1 HP 4P～10 HP 4P
0.5HP 6P～7.5HP 6P

15L-F

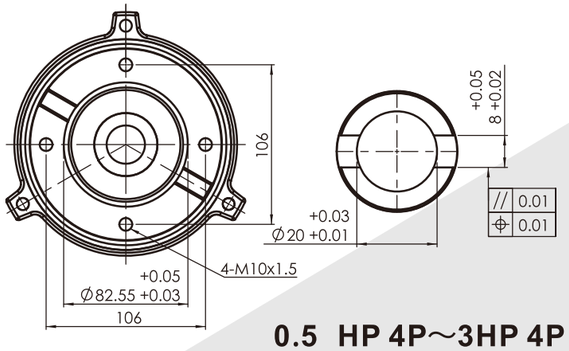

0.5 HP 4P～3HP 4P
0.25HP 6P～2HP 6P

由於本產品持續開發中，因此本公司保留隨時修改產品的設計、特性或是規格變更的權利，恕不另行通知。

Due to we continue to develop the products, we reserve the right to modify or improve the designs, features or specifications of our product at any time without notice.

IE1

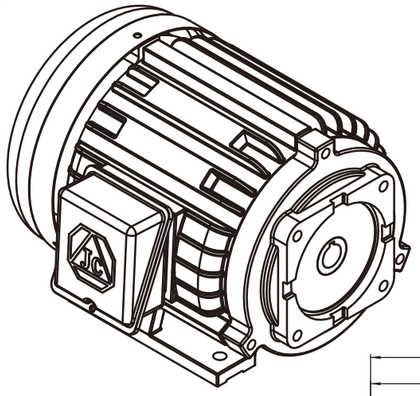

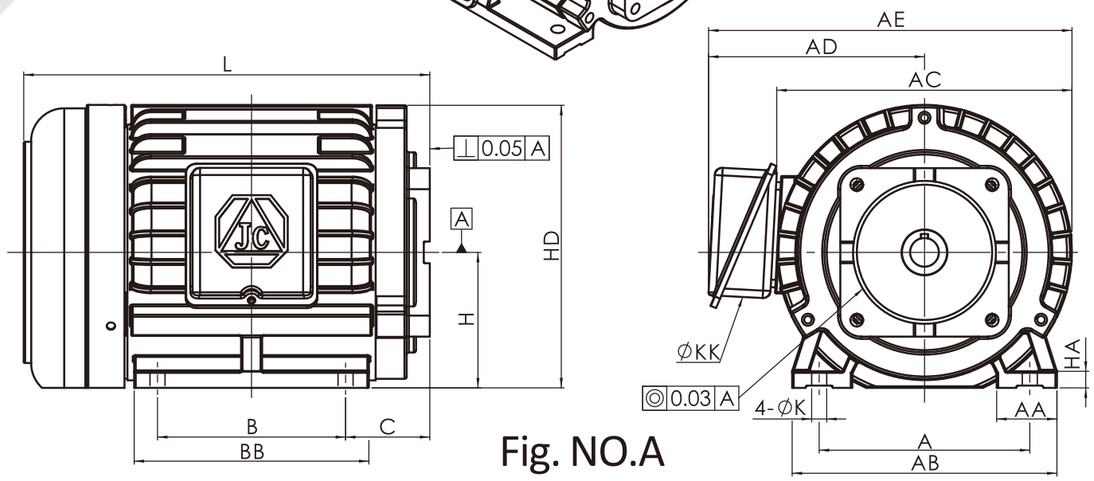

Fig. NO.A

Output(HP) 4P	Output(HP) 6P	框 號 Frame NO.	相 數 NO. of Phase	圖 號 Fig. NO.	A	AA	AB
0.5	0.25		3 Phase	A	**125**	35	153
1	0.5	80	3 Phase	A	**125**	35	153
2	1	90L	3 Phase	A	**140**	40	176
3	2	100L	3 Phase	B	**160**	46	198
3	2	112S	3 Phase	B	**190**	48	226
5	3	112M	3 Phase	B	**190**	48	226
7.5	5	132S	3 Phase	B	**216**	48.5	252
10	7.5	132M	3 Phase	B	**216**	48.5	252
15	10	160M	3 Phase	B	**254**	50	300
20	15	160L	3 Phase	B	**254**	50	300
25 30	20	180M	3 Phase	B	**279**	80	355
40	25 30	180L	3 Phase	B	**279**	80	355
0.5	-	80	1 Phase	A	**125**	35	153
1	-	90L	1 Phase	A	**140**	40	176
2	-	90L	1 Phase	A	**140**	40	176
3	-	112M	1 Phase	B	**190**	48	226
5	-	112L	1 Phase	B			

由於本產品持續開發中，因此本公司保留隨時修改產品的設計、特性或是規格變更的權利，恕不另行通知。

IE1

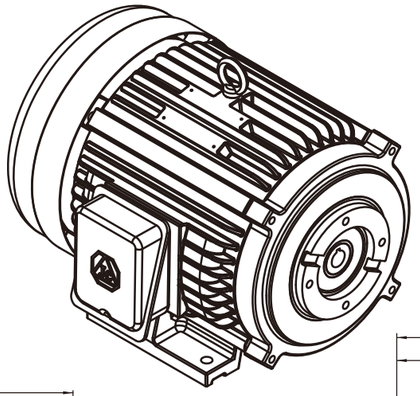

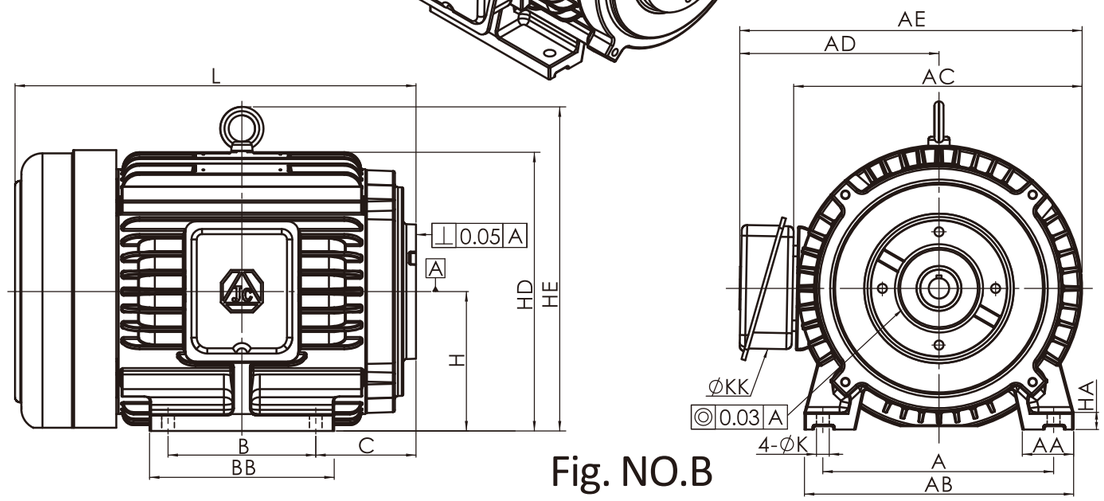

Fig. NO.B

AC	AD	AE	B	BB	C	H	HA	HD	HE	K	KK	L
176	134	221	**100**	133	43	80	10	168	-	10	22	226
176	134	221	**100**	133	50	80	10	168	-	10	22	240
196	144	242	**125**	156	56	90	11	188	-	10	22	270
220	158	268	**140**	175	65	100	13	211	246	12	22	305
233	164	278	**140**	172	48.5	112	11	230	264	12	22	277
234	164	278	**140**	177	70	112	14	230	264	12	22	320
270	190	325	**140**	175	78	132	15	267	309	12	28	346
270	190	325	**178**	214	76	132	15	267	309	12	28	380
333	258	421	**210**	250	87	160	18	323	376	14.5	35	478
333	258	421	**254**	300	87	160	18	323	376	14.5	35	522
381	300	490	**241**	297	103	180	20	370	421	14.5	35	550
381	300	490	**279**	335	103	180	20	370	421	14.5	35	584
176	134	221	**100**	133	50	80	10	168	-	10	22	240
196	144	242	**125**	156	56	90	11	188	-	10	22	270
196	144	242	**125**	156	56	90	11	188	-	10	22	270
234	164	278	**140**	177	70	112	14	230	264	12	22	320

Due to we continue to develop the products, we reserve the right to modify or improve the designs, features or specifications of our product at any time without notice.

IE3

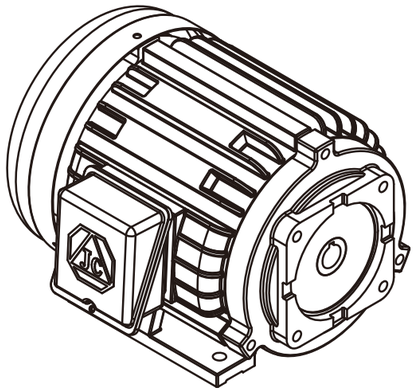

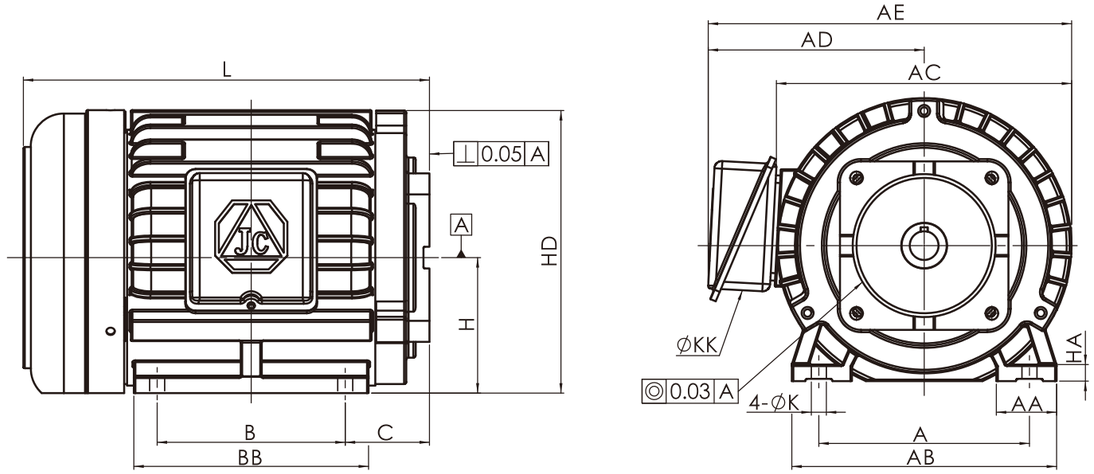

Fig. NO.A

Output(HP) 4P	Output(HP) 6P	框 號 Frame NO.	相 數 NO. of Phase	圖 號 Fig. NO.	A	AA	AB
1	0.5	80	3 Phase	A	**125**	35	153
2	1	90L	3 Phase	A	**140**	40	176
3	2	100L	3 Phase	B	**160**	46	198
5	3	112M	3 Phase	B	**190**	48	226
7.5	5	132S	3 Phase	B	**216**	48	252
10	7.5	132M	3 Phase	B	**216**	48	252
15	10	160M	3 Phase	B	**254**	50	300
20	15	160L	3 Phase	B	**254**	50	300
25 30	20	180M	3 Phase	B	**279**	80	355
40	25 30	180L	3 Phase	B	**279**	80	355

由於本產品持續開發中，因此本公司保留隨時修改產品的設計、特性或是規格變更的權利，恕不另行通知。

IE3

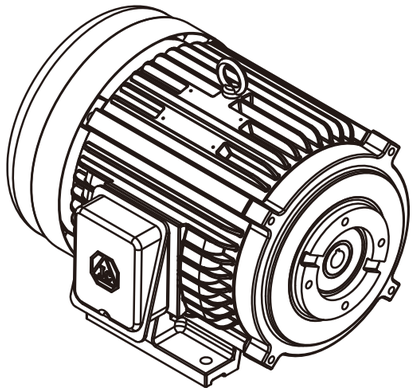

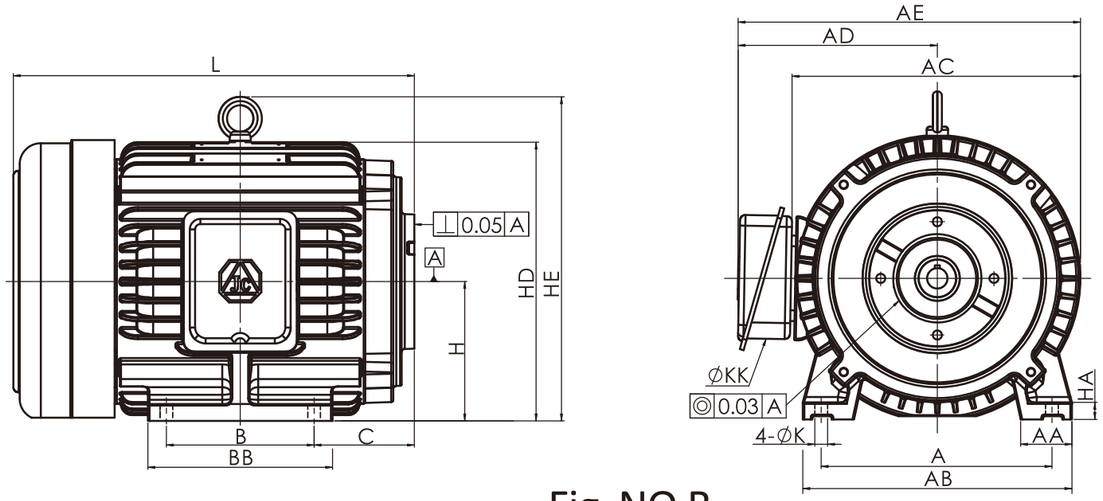

Fig. NO.B

AC	AD	AE	B	BB	C	H	HA	HD	HE	K	KK	L
176	134	221	**100**	133	50	80	10	168	-	10	22	240
196	144	242	**125**	156	56	90	11	188	-	10	22	270
220	158	268	**140**	175	65	100	13	211	246	12	22	305
234	164	278	**140**	177	70	112	14	230	264	12	22	320
270	187	321	**140**	175	95	132	16	264	307	12	28	380
270	187	321	**178**	213	93	132	16	264	307	12	28	414
333	258	421	**210**	250	87	160	18	323	376	14.5	35	478
333	258	421	**254**	300	87	160	18	323	376	14.5	35	522
381	300	490	**241**	297	103	180	20	370	421	14.5	35	550
381	300	490	**279**	335	103	180	20	370	421	14.5	35	584

Due to we continue to develop the products, we reserve the right to modify or improve the designs, features or specifications of our product at any time without notice.

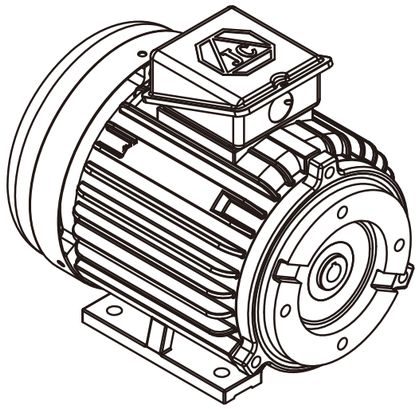

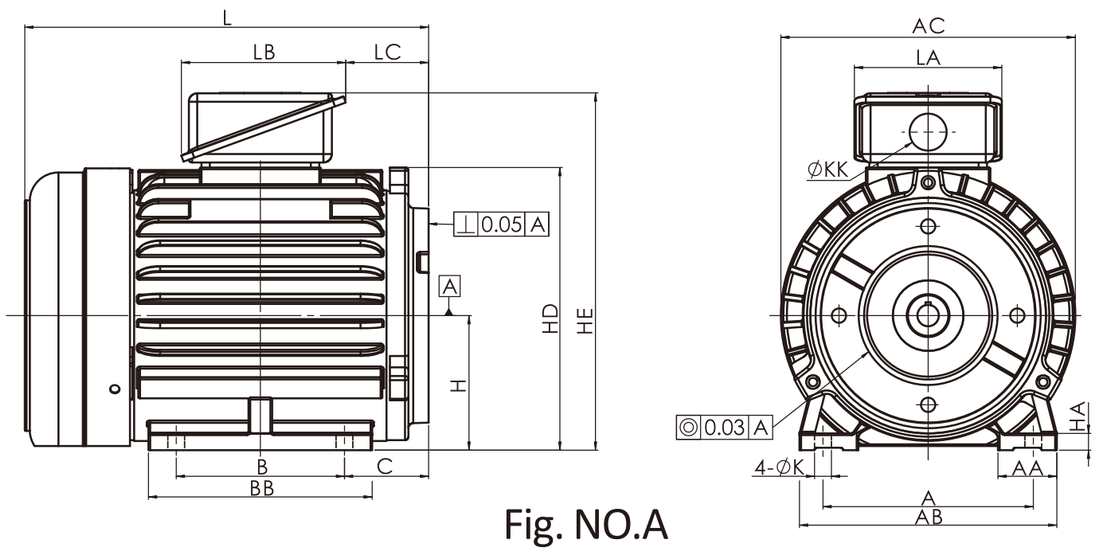

Fig. NO.A

Output(HP)		框 號	相 數	圖 號	A	AA	AB	AC
4P	6P	Frame NO.	NO. of Phase	Fig. NO.				
1	0.5	80	3 Phase	A	**125**	35	153	175
2	1	90L	3 Phase	A	**140**	40	176	196
3	2	100L	3 Phase	B	**160**	46	198	222
5	3	112M	3 Phase	B	**190**	45	224	231
7.5	5	132S	3 Phase	B	**216**	48	250	272
10	7.5	132M	3 Phase	B	**216**	48	250	272

由於本產品持續開發中，因此本公司保留隨時修改產品的設計、特性或是規格變更的權利，恕不另行通知。

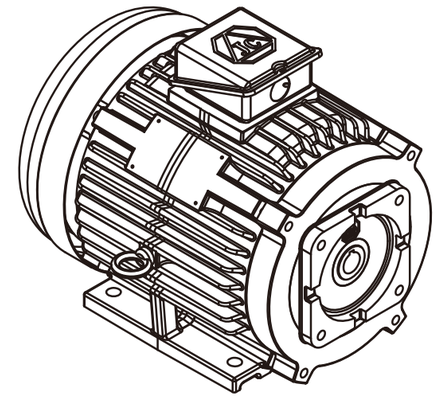

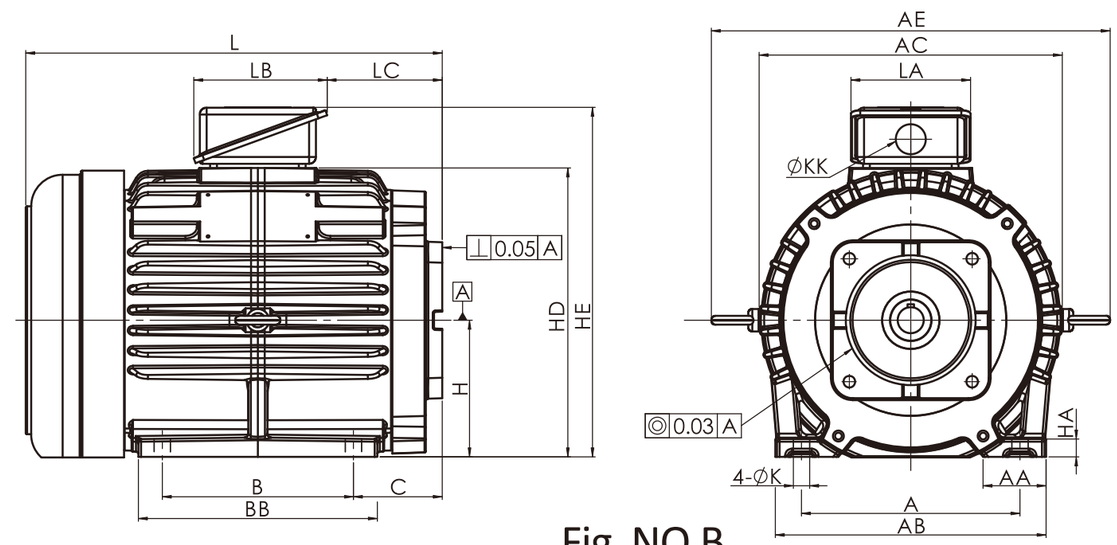

Fig. NO.B

AE	B	BB	C	H	HA	HD	HE	K	KK	L	LA	LB	LC
-	**100**	133	50	80	10	168	212	10	22	240	88	98	49
-	**125**	156	56	90	11	188	236	10	22	270	88	98	49
292	**140**	175	65	100	13	212	256	12	22	305	88	98	84
301	**140**	175	70	112	14	231	273	12	22	320	88	98	89
356	**140**	175	95	132	16	273	327	12	28	380	107	134	97
356	**178**	213	93	132	16	273	327	12	28	414	107	134	114

Due to we continue to develop the products, we reserve the right to modify or improve the designs, features or specifications of our product at any time without notice.

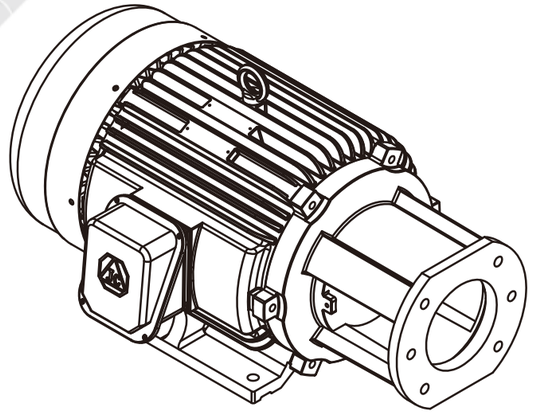

IE1

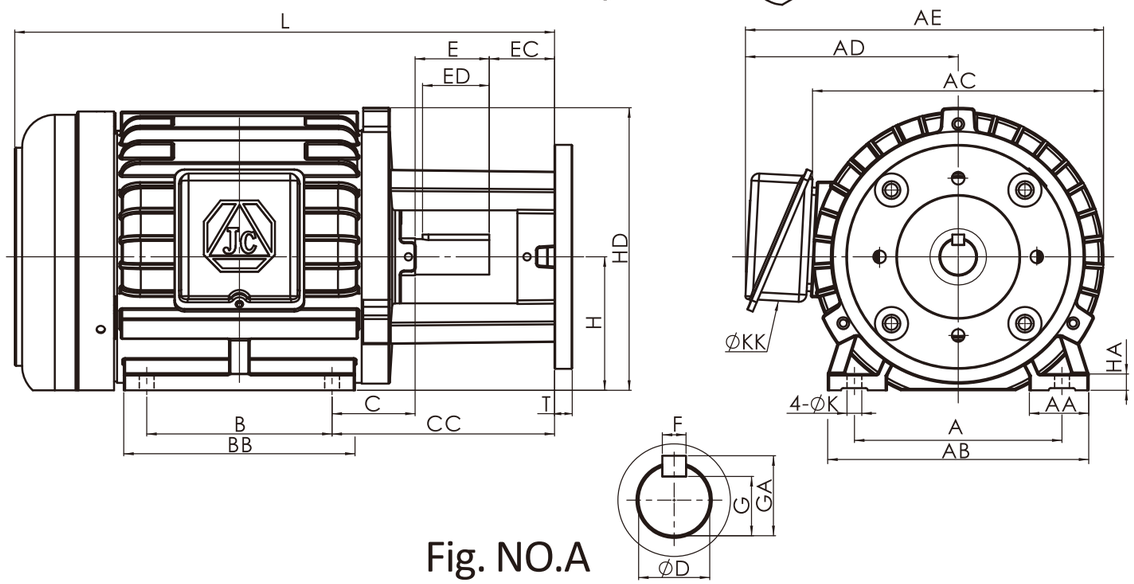

Fig. NO.A

Output(HP) 4P	Output(HP) 6P	框 號 Frame NO.	相 數 NO. of Phase	圖 號 Fig. NO.	A	AA	AB	AC	AD	AE	B	BB
1	0.5	80	3 Phase	A	125	35	153	176	134	221	100	133
2	1	90L	3 Phase	A	140	40	176	196	144	242	125	156
3	2	100L	3 Phase	B	160	46	198	223	158	268	140	175
3	2	112S	3 Phase	B	190	48	226	233	164	278	140	172
5	3	112M	3 Phase	B	190	48	226	233	164	278	140	177
7.5	5	132S	3 Phase	B	216	48.5	252	275	190	325	140	175
10	7.5	132M	3 Phase	B	216	48.5	252	275	190	325	178	214
15	10	160M	3 Phase	B	254	50	300	333	258	421	210	250
20	15	160L	3 Phase	B	254	50	300	333	258	421	254	300
25 30	20	180M	3 Phase	B	279	80	355	381	300	486	241	297
40	25 30	180L	3 Phase	B	279	80	355	381	300	486	279	335
50 60	40 50	200L	3 Phase	B	318	80	398	416	332	537	305	350

由於本產品持續開發中，因此本公司保留隨時修改產品的設計、特性或是規格變更的權利，恕不另行通知。

IE1

1 HP 4P～ 5 HP 4P 30L與50T無需轉接板
0.5 HP 6P～ 3 HP 6P 30L and 50T don't need board

7.5 HP 4P～20 HP 4P 150T無需轉接板
5 HP 6P～15 HP 6P 150T doesn't need board

25 HP 4P～60 HP 4P 4" 與5"與150T無需轉接板
20 HP 6P～50 HP 6P 4",5" and 150T don't need board

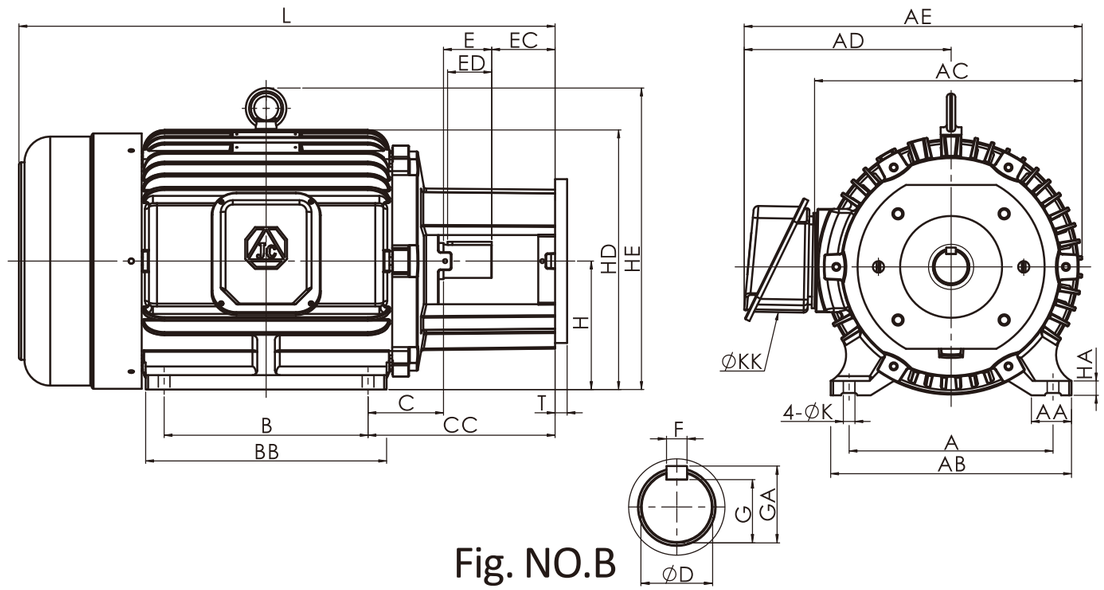

Fig. NO.B

C	CC	H	HA	HD	HE	K	KK	L	Shaft End D	F	E	ED	EC	G	GA	T
45	120	80	10	167	-	10	22	310	19	6	30	30	45	15.5	21.5	12
56	150	90	11	191	-	10	22	364	24	8	50	45	44	20	27	12
65	164.5	100	13	211	246	12	22	405	28	8	40	35	59.5	24	31	12
48.5	143.5	112	11	227	264	12	22	372	28	8	40	35	55	24	31	12
70	165	112	11	230	264	12	22	415	28	8	40	35	55	24	31	12
71	196	132	15	267	309	12	28	465	38	10	60	50	65	33	41	15
69	194	132	15	267	302	12	28	499	38	10	60	50	65	33	41	15
94	233	160	18	323	376	14.5	35	624	42	12	60	55	79	37	45	15
94	233	160	18	323	376	14.5	35	668	42	12	60	55	79	37	45	15
131	292	180	20	365	417	14.5	52	735	48	14	70	55	91	42.5	51.5	15
131	292	180	20	365	417	14.5	52	773	55	16	70	55	91	49	59	15
145	315	200	24	407	466	18.5	60	840	55	16	70	105	60	49	59	15

Due to we continue to develop the products, we reserve the right to modify or improve the designs, features or specifications of our product at any time without notice.

IE3

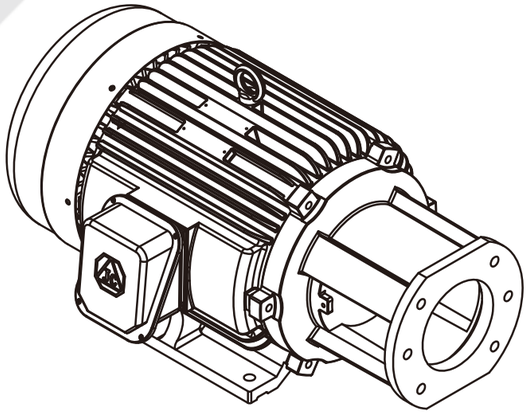

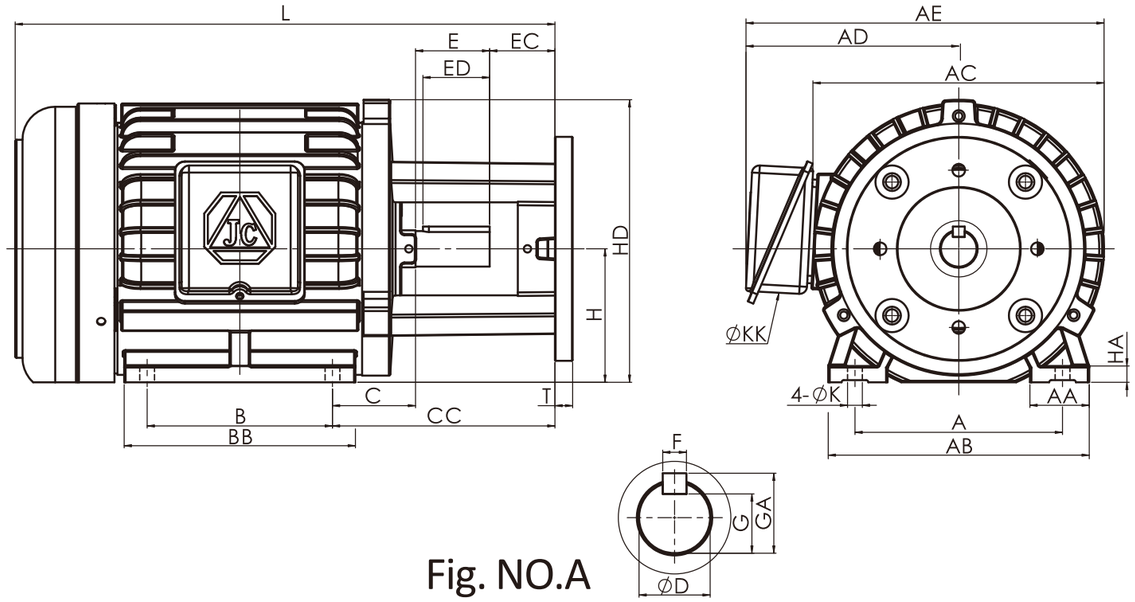

Fig. NO.A

Output(HP) 4P	Output(HP) 6P	框 號 Frame NO.	相 數 NO. of Phase	圖 號 Fig. NO.	A	AA	AB	AC	AD	AE	B	BB
1	0.5	80	3 Phase	A	125	35	153	176	134	221	100	133
2	1	90L	3 Phase	A	140	40	176	196	144	242	125	156
3	2	100L	3 Phase	B	160	46	198	223	158	268	140	175
5	3	112M	3 Phase	B	190	48	226	233	164	278	140	177
7.5	5	132S	3 Phase	B	216	48	252	271	187	322	140	175
10	7.5	132M	3 Phase	B	216	48	252	271	187	322	178	213
15	10	160M	3 Phase	B	254	50	300	333	258	421	210	250
20	15	160L	3 Phase	B	254	50	300	333	258	421	254	300
25 30	20	180M	3 Phase	B	279	80	355	381	300	486	241	297
40	25 30	180L	3 Phase	B	279	80	355	381	300	486	279	335
50 60	40 50	200L	3 Phase	B	318	80	398	416	332	537	305	350

由於本產品持續開發中，因此本公司保留隨時修改產品的設計、特性或是規格變更的權利，恕不另行通知。

IE3

1 HP 4P～ 5 HP 4P 30L與50T無需轉接板
0.5 HP 6P～ 3 HP 6P 30L and 50T don't need board

7.5 HP 4P～20 HP 4P 150T無需轉接板
5 HP 6P～15 HP 6P 150T doesn't need board

25 HP 4P～60 HP 4P 4" 與5"與150T無需轉接板
20 HP 6P～50 HP 6P 4",5" and 150T don't need board

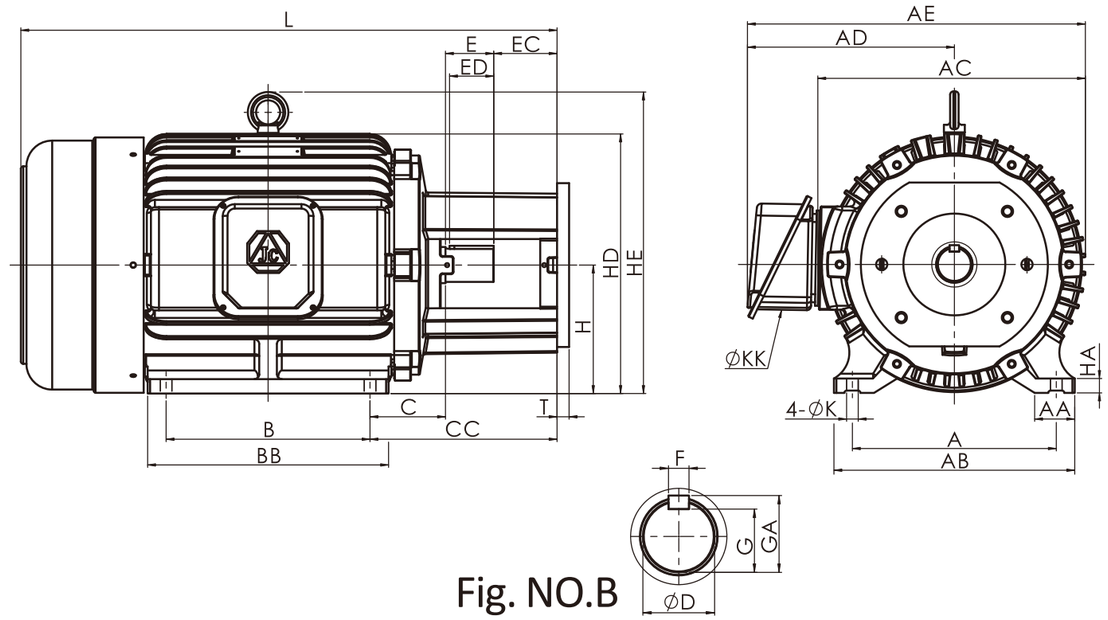

Fig. NO.B

C	CC	H	HA	HD	HE	K	KK	L	Shaft End D	Shaft End F	Shaft End E	Shaft End ED	Shaft End EC	Shaft End G	Shaft End GA	Shaft End T
45	120	80	10	167	-	10	22	310	19	6	30	30	45	15.5	21.5	12
56	150	90	11	191	-	10	22	364	24	8	50	45	44	20	27	12
65	164.5	100	13	211	246	12	22	405	28	8	40	35	59.5	24	31	12
70	165	112	11	230	264	12	22	415	28	8	40	35	55	24	31	12
88	213	132	16	264	299	12	28	499	38	10	60	50	65	33	41	15
86	211	132	16	264	299	12	28	533	38	10	60	50	65	33	41	15
94	233	160	18	323	376	14.5	35	624	42	12	60	55	79	37	45	15
94	233	160	18	323	376	14.5	35	668	42	12	60	55	79	37	45	15
131	292	180	20	365	417	14.5	52	735	48	14	70	55	91	42.5	51.5	15
131	292	180	20	365	417	14.5	52	773	55	16	70	55	91	49	59	15
145	315	200	24	407	466	18.5	60	840	55	16	70	70	100	49	59	15

Due to we continue to develop the products, we reserve the right to modify or improve the designs, features or specifications of our product at any time without notice.

IE1

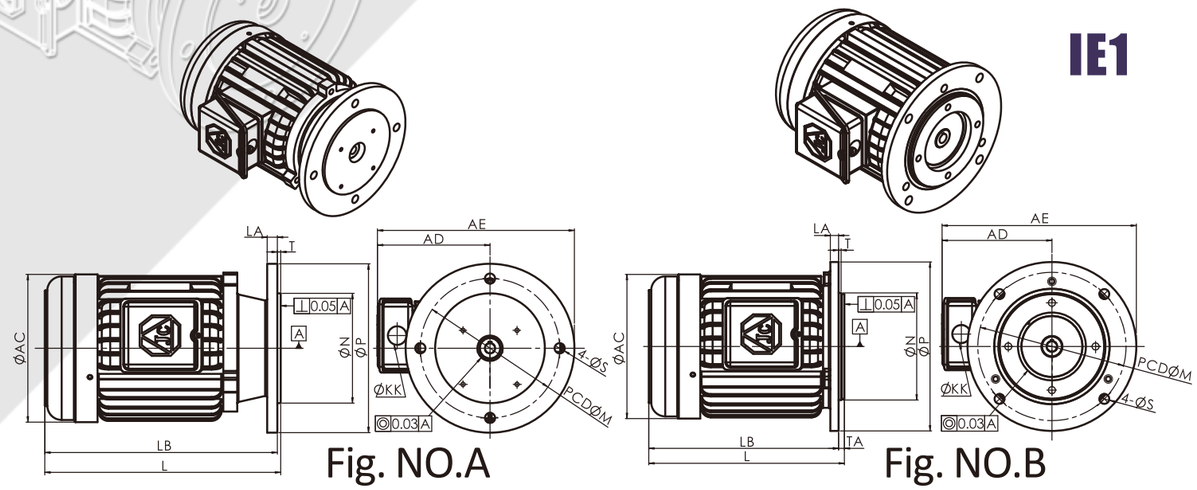

Fig. NO.A

Fig. NO.B

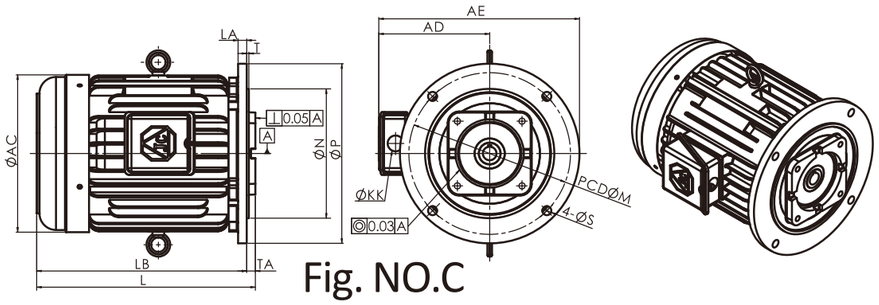

Fig. NO.C

Output(HP)		框 號	相 數	圖 號	AC	AD	AE	KK	L
4P	6P	Frame NO.	NO. of Phase	Fig. NO.					
0.5	0.25		3 Phase	A	156	122	202	22	243
1	0.5	80	3 Phase	A	175	133	233	22	285
1	0.5	80	3 Phase	B	175	133	236	22	238
1	0.5	80	3 Phase	B	175	133	236	22	238
2	1	90L	3 Phase	B	196	142	257	22	275
2	1	90L	3 Phase	B	196	142	257	22	275
3	2	100L	3 Phase	C	219	154	286	22	305
5	3	112M	3 Phase	D	228	161	286	22	320
7.5	5	132S	3 Phase	E	268	196	346	28	346
10	7.5	132M	3 Phase	E	268	196	346	28	380
0.5	-	80	1 Phase	A	175	133	233	22	285
0.5	-	80	1 Phase	B	175	133	236	22	238
1	-	90L	1 Phase	B	196	142	257	22	275
2	-	90L	1 Phase	B	196	142	257	22	275
2	-	90L	1 Phase	B	196	142	257	22	275
3	-	112M	1 Phase	D	228	161	286	22	320

由於本產品持續開發中，因此本公司保留隨時修改產品的設計、特性或是規格變更的權利，恕不另行通知。

IE1

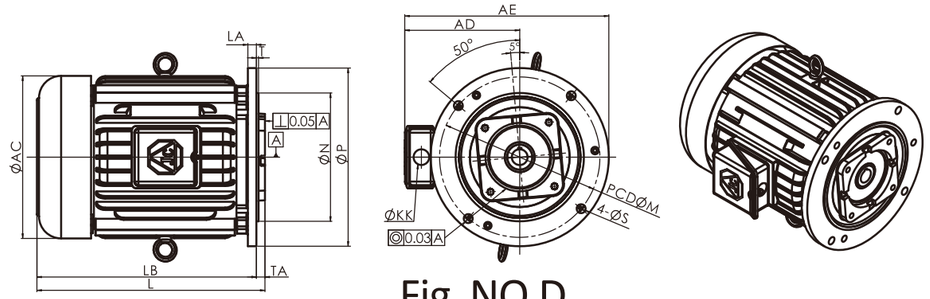

Fig. NO.D

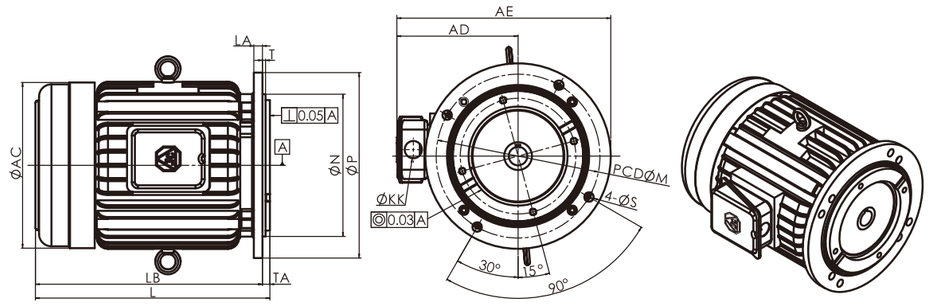

Fig. NO.E

LA	LB	M	N	P	S	T	TA	可 搭 配 泵 浦
								Pump Type
11	240	**140**	**120**	160	10	3	3	1A
10	276	**165**	**130**	200	12	3	16	1A、TFP、DS
10	231	**180**	**130**	205	12	3	7	PA、15L、TSP、P16
10	231	**180**	**150**	205	12	2	7	30L
10	268	**200**	**130**	230	12	3	7	PA、15L、TSP、P16
10	268	**200**	**150**	230	12	2	7	30L、50T
12	293	**225**	**180**	250	12	3	12	ALL
12	308	**225**	**180**	250	12	3	12	ALL
14	334	**265**	**230**	300	15	5	12	ALL
14	368	**265**	**230**	300	15	5	12	ALL
10	276	**165**	**130**	200	12	3	3	1A
10	231	**180**	**130**	205	12	3	7	PA、15L、TSP、P16
10	268	**200**	**130**	230	12	3	7	PA、15L、TSP、P16
10	268	**200**	**130**	230	12	3	7	PA、15L、TSP、P16
10	268	**200**	**150**	230	12	2	7	30L、50T
12	308	**225**	**180**	250	12.5	3	12	PA、P16、30L

Due to we continue to develop the products, we reserve the right to modify or improve the designs, features or specifications of our product at any time without notice.

IE3

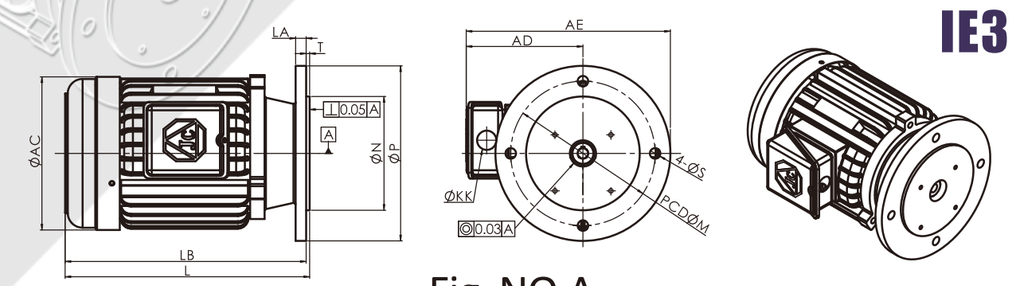

Fig. NO.A

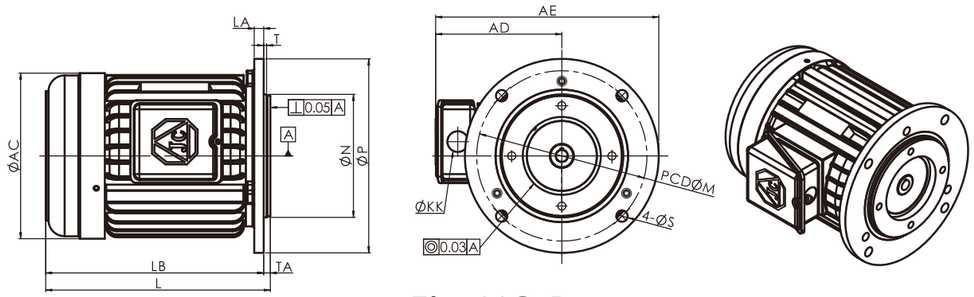

Fig. NO.B

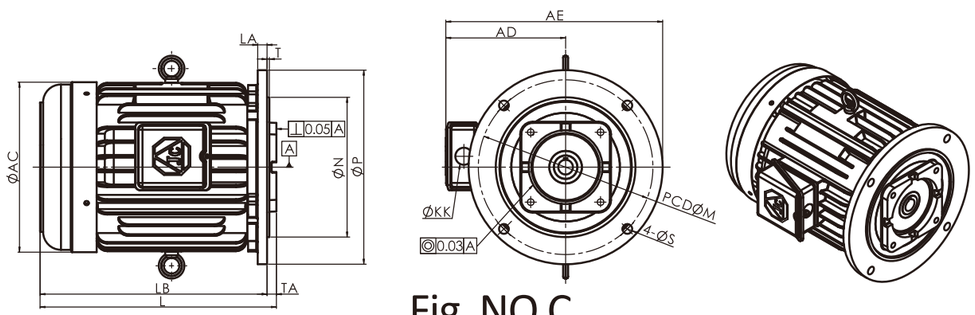

Fig. NO.C

Output(HP)		框 號	相 數	圖 號	AC	AD	AE	KK	L
4P	6P	Frame NO.	NO. of Phase	Fig. NO.					
1	0.5	80	3 Phase	A	175	133	233	22	285
1	0.5	80	3 Phase	B	175	133	236	22	238
1	0.5	80	3 Phase	B	175	133	236	22	238
2	1	90L	3 Phase	B	196	142	257	22	275
2	1	90L	3 Phase	B	196	142	257	22	275
3	2	100L	3 Phase	C	219	154	286	22	305
5	3	112M	3 Phase	D	228	161	286	22	320
7.5	5	132S	3 Phase	E	268	196	346	28	380
10	7.5	132M	3 Phase	E	268	196	346	28	414

由於本產品持續開發中，因此本公司保留隨時修改產品的設計、特性或是規格變更的權利，恕不另行通知。

IE3

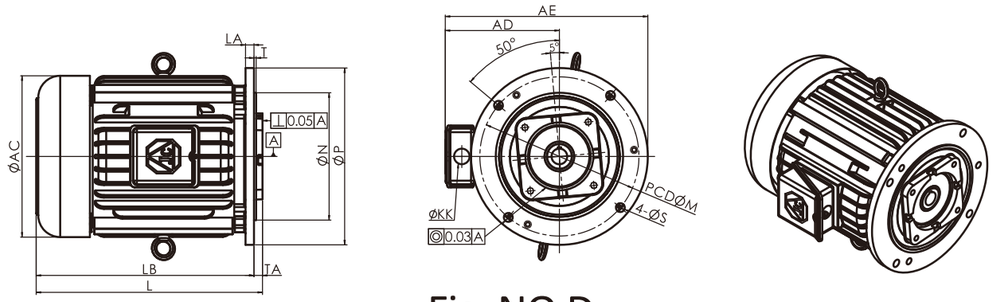

Fig. NO.D

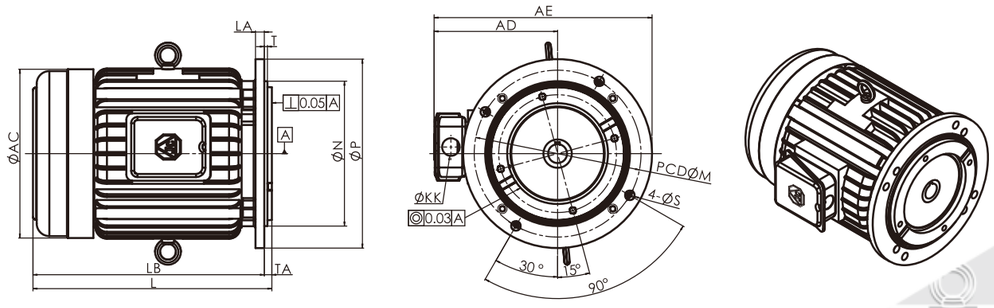

Fig. NO.E

LA	LB	M	N	P	S	T	TA	可 搭 配 泵 浦
								Pump Type
10	276	**165**	**130**	200	12	3	16	1A、TFP、DS
10	231	**180**	**130**	205	12	3	7	PA、15L、TSP、P16
10	231	**180**	**150**	205	12	2	7	30L
10	268	**200**	**130**	230	12	3	7	PA、15L、TSP、P16
10	268	**200**	**150**	230	12	2	7	30L、50T
12	293	**225**	**180**	250	12.5	3	12	ALL
12	308	**225**	**180**	250	12.5	3	12	ALL
14	368	**265**	**230**	300	15	5	12	ALL
14	402	**265**	**230**	300	15	5	12	ALL

Due to we continue to develop the products, we reserve the right to modify or improve the designs, features or specifications of our product at any time without notice.

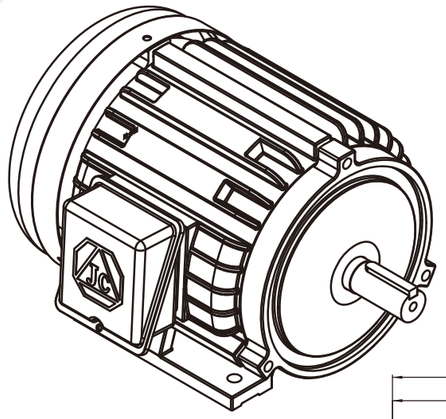

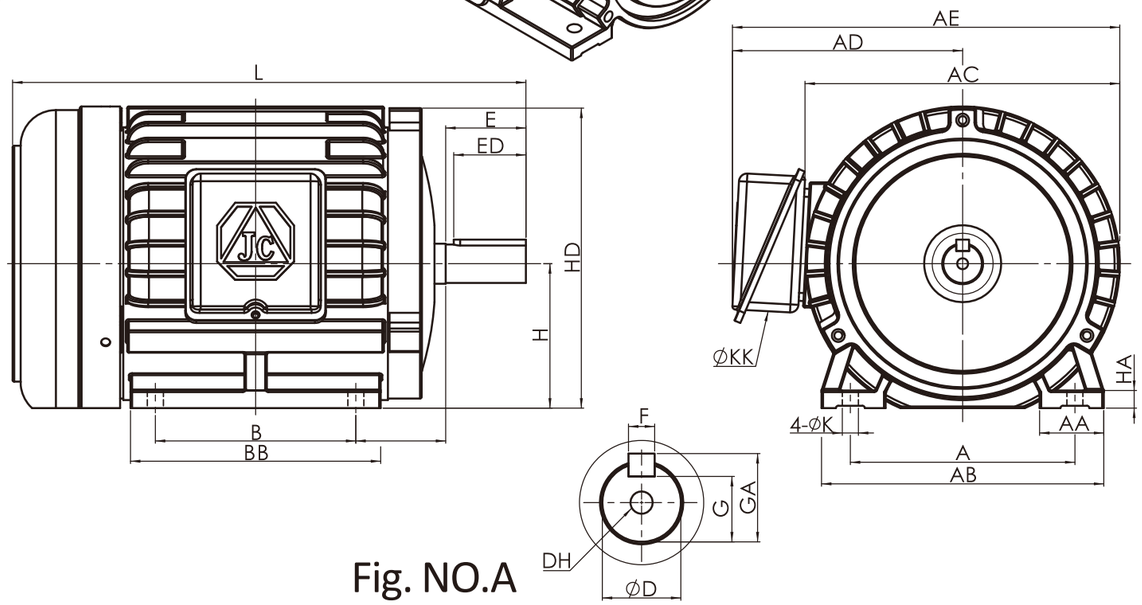

Fig. NO.A

Output(HP) 4P	Output(HP) 6P	框 號 Frame NO.	相 數 NO. of Phase	圖 號 Fig. NO.	A	AA	AB	AC	AD	AE	B
0.5	0.25	71	3 Phase	A	112	37.5	138	164	138	220	90
1	0.5	80	3 Phase	A	125	35	153	176	134	221	100
2	1	90L	3 Phase	A	140	40	176	196	144	242	125
3	2	100L	3 Phase	B	160	46	198	220	158	268	140
5	3	112M	3 Phase	B	190	48	226	233	164	278	140
7.5	5	132S	3 Phase	B	216	48	252	271	187	322	140
10	7.5	132M	3 Phase	B	216	48	252	271	187	322	178
15	10	160M	3 Phase	B	254	50	300	333	258	421	210
20	15	160L	3 Phase	B	254	50	300	333	258	421	254
25 30	20	180M	3 Phase	B	279	80	355	381	300	486	241
40	25 30	180L	3 Phase	B	279	80	355	381	300	486	279
50 60	40 50	200L	3 Phase	B	318	80	398	421	332	542	305

由於本產品持續開發中，因此本公司保留隨時修改產品的設計、特性或是規格變更的權利，恕不另行通知。

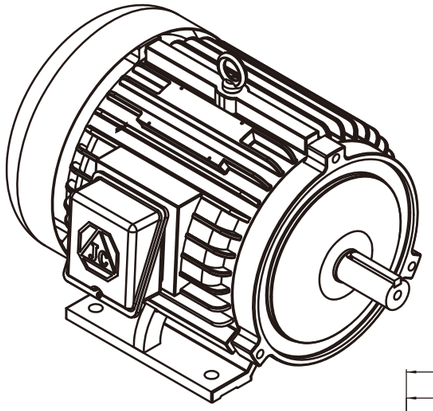

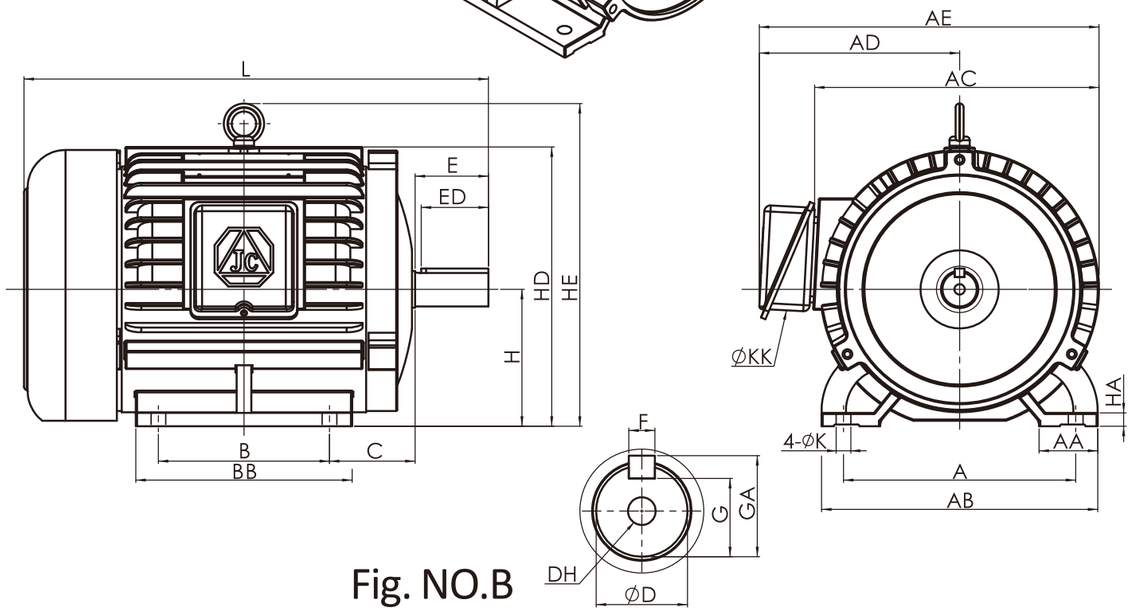

Fig. NO.B

BB	C	H	HA	HD	HE	K	KK	L	Shaft End D	Shaft End E	Shaft End ED	Shaft End F	Shaft End G	Shaft End GA	Shaft End DH
119	45	71	11	152	38	7	22	240	14	30	25	5	11	16	M5*12.5
133	50	80	10	168	-	10	22	280	19	40	35	6	15.5	21.5	M6*16
156	56	90	11	187	-	10	22	320	24	50	45	8	20	27	M8*19
175	63	100	13	211	246	12	22	363	28	60	55	8	24	31	M10*22
177	70	112	11	229	264	12	22	380	28	60	55	8	24	31	M10*22
175	89	132	16	264	300	12	28	455	38	80	70	10	33	41	M12*28
213	89	132	16	264	300	12	28	491	38	80	70	10	33	41	M12*28
250	108	160	18	323	376	14.5	35	612	42	110	100	12	37	45	M16*36
300	108	160	18	323	376	14.5	35	656	42	110	100	12	37	45	M16*36
297	121	180	20	365	417	14.5	52	674	48	110	100	14	42.5	51.5	M16*36
335	121	180	20	365	417	14.5	52	712	55	110	100	16	49	59	M20*42
350	133	200	24	418	469	18.5	60	803	60	140	135	18	53	64	M20*42

Due to we continue to develop the products, we reserve the right to modify or improve the designs, features or specifications of our product at any time without notice.

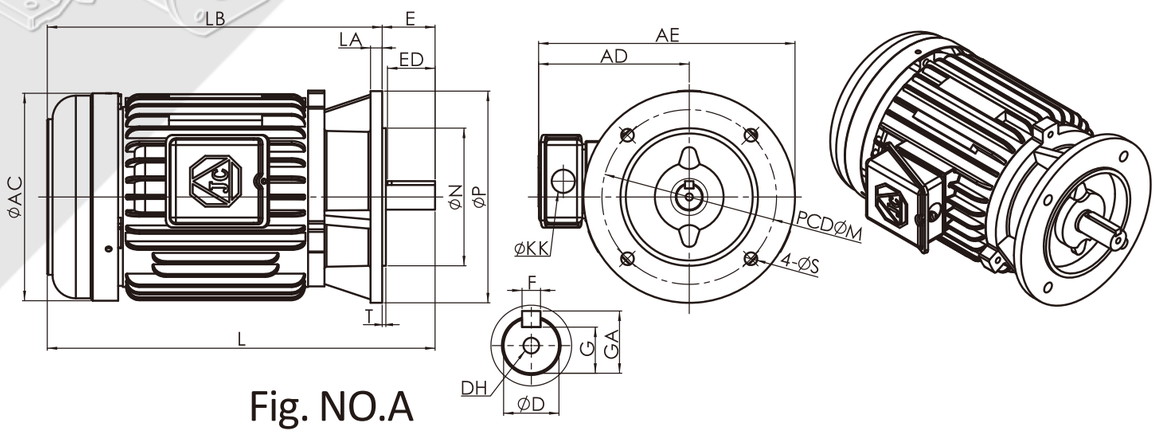

Fig. NO.A

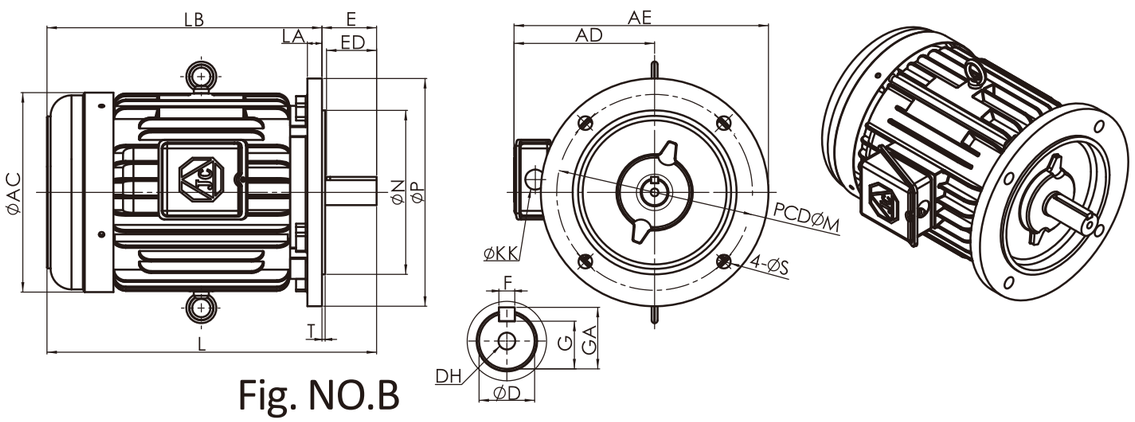

Fig. NO.B

Output(HP)		框 號	相 數	圖 號	AC	AD	AE	KK	L
4P	6P	Frame NO.	NO. of Phase	Fig. NO.					
0.5	0.25	71	3 Phase	A	156	122	202	22	269
1	0.5	80	3 Phase	B	175	133	233	22	280
2	1	90L	3 Phase	A	196	142	243	22	367
3	2	100L	3 Phase	B	219	154	286	22	362
5	3	112M	3 Phase	A	234	160	286	22	428
7.5	5	132S	3 Phase	C	268	196	346	28	454
10	7.5	132M	3 Phase	C	268	196	346	28	488
15	10	160M	3 Phase	B	319	253	428	35	612
20	15	160L	3 Phase	B	319	253	428	35	656
25 30	20	180M	3 Phase	B	355	303	503	52	668
40	25 30	180L	3 Phase	B	355	303	503	52	708
50 60	40 50	200L	3 Phase	B	399	332	557	60	803

由於本產品持續開發中，因此本公司保留隨時修改產品的設計、特性或是規格變更的權利，恕不另行通知。

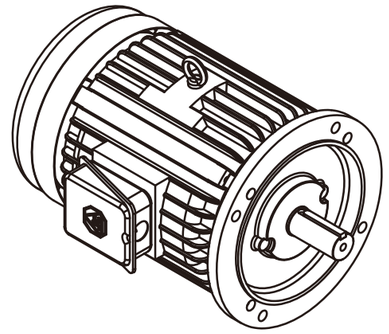

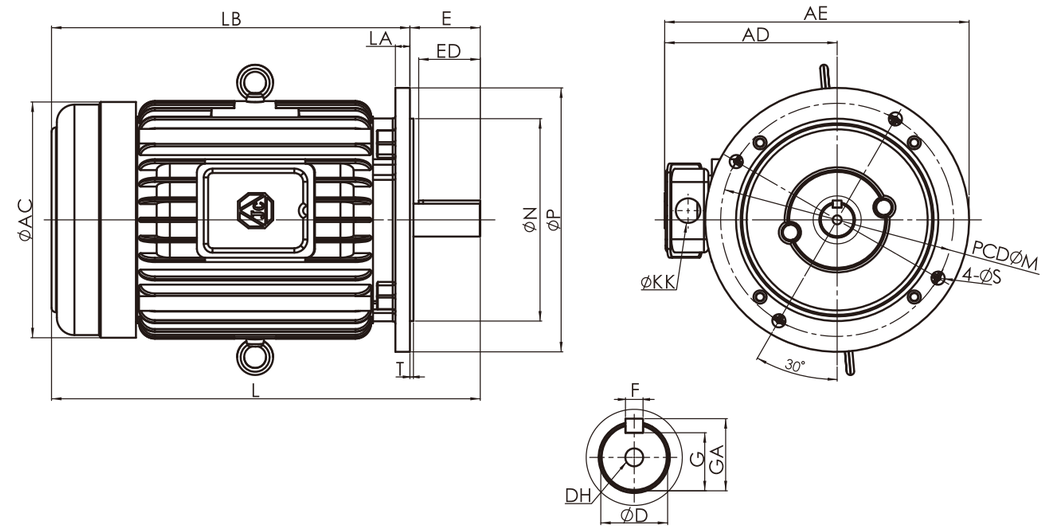

Fig. NO.C

LA	LB	M	N	P	S	T	Shaft End						
							D	E	ED	F	G	GA	DH
10	239	130	110	160	10	3.5	14	30	25	5	11	16	M5*12.5
12	240	165	130	200	12	3.5	19	40	35	6	15.5	21.5	M6*16
11	317	165	130	200	12	3.5	24	50	45	8	20	27	M8*19
16	302	215	180	250	15	3.5	28	60	55	8	24	31	M10*22
15	368	215	180	250	15	3.5	28	60	55	8	24	31	M10*22
16.5	374	265	230	300	15	4	38	80	70	10	33	41	M12*28
16.5	408	265	230	300	15	4	38	80	70	10	33	41	M12*28
20	502	300	250	350	19	5	42	110	100	12	37	45	M16*36
20	546	300	250	350	19	5	42	110	100	12	37	45	M16*36
20	558	350	300	400	19	5	48	110	100	14	42.5	51.5	M16*36
20	598	350	300	400	19	5	55	110	100	16	49	59	M20*42
20	666	400	350	450	19	5	60	140	135	18	53	64	M20*42

Due to we continue to develop the products, we reserve the right to modify or improve the designs, features or specifications of our product at any time without notice.

50HZ 三相 滿載電流特性表

Output					Efficiency		Current (A)											
馬力 HP	功率 kW	極數 P	轉速 IE1 RPM	轉速 IE3 RPM	效率 IE1	效率 IE3	200V	208V	220V	230V	240V	380V	400V	415V	440V	460V	480V	575V
1/4	0.18	4P	1380	-	57.0	-	1.1	1.1	1	1.0	0.9	0.6	0.6	0.5	0.5	0.5	0.5	0.4
1/2	0.37		1390	-	66.0	-	2.0	1.9	1.8	1.7	1.7	1.0	1.0	1.0	0.9	0.9	0.8	0.7
1	0.75		1420	1430	72.1	82.5	4.0	3.8	3.6	3.4	3.3	2.1	2.0	1.9	1.8	1.8	1.7	1.4
2	1.5		1420	1430	77.2	85.3	7.3	7.0	6.6	6.3	6.1	3.8	3.6	3.5	3.3	3.3	3.0	2.5
3	2.2		1420	1430	79.7	86.7	10.5	9.5	9.0	8.6	8.3	5.2	5.0	4.8	4.5	4.4	4.1	3.4
5	3.7		1440	1450	83.1	88.6	16.5	15.0	14.2	13.6	13.0	8.2	7.8	7.5	7.1	7.0	6.5	5.4
7.5	5.5		1440	1450	84.7	89.6	24.4	22.2	21.0	20.1	19.3	12.2	11.6	11.1	10.5	10.4	9.6	8.0
10	7.5		1440	1450	86.0	90.4	32.6	29.6	28.0	26.8	25.7	16.2	15.4	14.8	14.0	13.8	12.8	10.7
15	11		1450	1460	87.6	91.4	43.6	39.7	37.5	35.9	34.4	21.7	20.6	19.9	18.8	18.5	17.2	14.3
20	15		1450	1460	88.7	92.1	59.3	53.9	51.0	48.8	46.8	29.5	28.1	27.0	25.5	25.2	23.4	19.5
25	18.5		1450	1460	89.3	92.6	75.5	68.6	64.9	62.1	59.5	37.6	35.7	34.4	32.5	32.0	29.7	24.8
30	22		1450	1460	89.9	93.0	87.7	79.8	75.4	72.1	69.1	43.7	41.5	40.0	37.7	37.2	34.6	28.8
40	30		1450	1460	90.7	93.6	115.3	104.8	99.1	94.8	90.8	57.4	54.5	52.5	49.6	48.9	45.4	37.9
50	37		1450	1460	91.2	93.9	145.4	132.2	125	119.6	114.6	72.4	68.8	66.3	62.5	61.7	57.3	47.8
60	45		1450	1460	91.7	94.2	163.9	157.6	149	142.5	136.6	86.3	82.0	79.0	74.5	73.5	68.3	57.0
1/4	0.18	6P	925	-	45.5	-	1.5	1.5	1.4	1.3	1.3	0.8	0.8	0.7	0.7	0.7	0.6	0.5
1/2	0.37		930	-	59.7	-	2.4	2.3	2.2	2.1	2.0	1.3	1.2	1.2	1.1	1.1	1.0	0.8
1	0.75		940	950	70.0	78.9	4.4	4.2	4.0	3.8	3.7	2.3	2.2	2.1	2.0	2.0	1.8	1.5
2	1.5		940	950	75.2	82.5	8.0	7.7	7.3	7.0	6.7	4.2	4.0	3.9	3.7	3.6	3.3	2.8
3	2.2		940	950	77.7	84.3	10.2	9.8	9.3	8.9	8.5	5.4	5.1	4.9	4.7	4.6	4.3	3.6
5	3.7		940	950	81.4	86.8	17.3	16.6	15.7	15.0	14.4	9.1	8.6	8.3	7.9	7.7	7.2	6.0
7.5	5.5		940	950	83.1	88.0	24.3	23.4	22.1	21.1	20.3	12.8	12.2	11.7	11.1	10.9	10.1	8.5
10	7.5		940	950	84.7	89.1	31.4	30.1	28.5	27.3	26.1	16.5	15.7	15.1	14.3	14.1	13.1	10.9
15	11		950	960	86.4	90.3	43.1	41.5	39.2	37.5	35.9	22.7	21.6	20.8	19.6	19.3	18.0	15.0
20	15		950	960	87.7	91.2	57.0	54.8	51.8	49.5	47.5	30.0	28.5	27.5	25.9	25.6	23.7	19.8
25	18.5		950	960	88.6	91.7	70.4	67.7	64.0	61.2	58.7	37.1	35.2	33.9	32.0	31.6	29.3	24.5
30	22		950	960	89.2	92.2	88.0	84.6	80.0	76.5	73.3	46.3	44.0	42.4	40.0	39.5	36.7	30.6
40	30		950	960	90.2	92.9	107.8	103.7	98	93.7	89.8	56.7	53.9	52.0	49.0	48.3	44.9	37.5
50	37		950	960	90.8	93.3	144.1	138.6	131	125.3	120.1	75.8	72.1	69.4	65.5	64.6	60.0	50.1

60HZ 三相 滿載電流特性表

Output					Efficiency		Current (A)											
馬力 HP	功率 kW	極數 P	轉速 IE1 RPM	轉速 IE3 RPM	效率 IE1	效率 IE3	200V	208V	220V	230V	240V	380V	400V	415V	440V	460V	480V	575V
1/4	0.18	4P	1650	-	66.0	-	1.1	1.1	1.0	1.0	0.9	0.6	0.6	0.5	0.5	0.5	0.5	0.4
1/2	0.37		1680	-	70.0	-	2.0	1.9	1.8	1.7	1.7	1.0	1.0	1.0	0.9	0.9	0.8	0.7
1	0.75		1720	1730	77.0	83.5	3.5	3.4	3.2	3.1	2.9	1.9	1.8	1.7	1.6	1.6	1.5	1.2
2	1.5		1720	1740	81.5	86.5	6.8	6.6	6.2	5.9	5.7	3.6	3.4	3.3	3.1	3.1	2.8	2.4
3	2.2		1720	1740	83.0	89.5	10.0	9.1	8.6	8.2	7.9	5.0	4.7	4.6	4.3	4.2	3.9	3.3
5	3.7		1740	1750	85.0	89.5	15.7	14.3	13.5	12.9	12.4	7.8	7.4	7.2	6.8	6.7	6.2	5.2
7.5	5.5		1740	1750	87.0	91.7	23.9	21.7	20.5	19.6	18.8	11.9	11.3	10.9	10.3	10.1	9.4	7.8
10	7.5		1740	1750	87.5	91.7	31.6	28.8	27.2	26.0	24.9	15.7	15.0	14.4	13.6	13.4	12.5	10.4
15	11		1750	1760	88.5	92.4	42.7	38.8	36.7	35.1	33.6	21.2	20.2	19.5	18.4	18.1	16.8	14.0
20	15		1750	1760	89.5	93.0	59.1	53.7	50.8	48.6	46.6	29.4	27.9	26.9	25.4	25.1	23.3	19.4
25	18.5		1750	1760	90.5	93.6	71.7	65.2	61.6	58.9	56.5	35.7	33.9	32.7	30.8	30.4	28.2	23.6
30	22		1750	1760	91.0	93.6	83.8	76.2	72.0	68.9	66.0	41.7	39.6	38.2	36.0	35.5	33.0	27.5
40	30		1750	1760	91.7	94.1	112.9	102.6	97.0	92.8	88.9	56.2	53.4	51.4	48.5	47.8	44.5	37.1
50	37		1750	1760	92.4	94.5	141.9	129.0	122	116.7	111.8	70.6	67.1	64.7	61.0	60.2	55.9	46.7
60	45		1750	1760	93.0	95.0	159.5	153.4	145	138.7	132.9	83.9	79.8	76.9	72.5	71.5	66.5	55.5
1/4	0.18	6P	1120	-	52.5	-	1.3	1.3	1.2	1.1	1.1	0.7	0.7	0.6	0.6	0.6	0.6	0.5
1/2	0.37		1120	-	62.0	-	2.4	2.3	2.2	2.1	2.0	1.3	1.2	1.2	1.1	1.1	1.0	0.8
1	0.75		1140	1145	72.0	82.5	4.0	3.8	3.6	3.4	3.3	2.1	2.0	1.9	1.8	1.8	1.7	1.4
2	1.5		1140	1160	77.0	88.5	7.5	7.2	6.8	6.5	6.2	3.9	3.7	3.6	3.4	3.4	3.1	2.6
3	2.2		1140	1160	78.5	89.5	9.9	9.5	9.0	8.6	8.3	5.2	5.0	4.8	4.5	4.4	4.1	3.4
5	3.7		1150	1160	83.5	89.5	16.5	15.9	15.0	14.3	13.8	8.7	8.3	8.0	7.5	7.4	6.9	5.7
7.5	5.5		1150	1160	85.0	91.0	24.2	23.3	22.0	21.0	20.2	12.7	12.1	11.7	11.0	10.9	10.1	8.4
10	7.5		1150	1160	86.0	91.0	30.8	29.6	28.0	26.8	25.7	16.2	15.4	14.8	14.0	13.8	12.8	10.7
15	11		1160	1170	89.0	91.7	41.5	39.9	37.7	36.1	34.6	21.8	20.7	20.0	18.9	18.6	17.3	14.4
20	15		1160	1170	89.5	91.7	56.4	54.3	51.3	49.1	47.0	29.7	28.2	27.2	25.7	25.3	23.5	19.6
25	18.5		1160	1170	90.2	93.0	69.3	66.6	63.0	60.3	57.8	36.5	34.7	33.4	31.5	31.1	28.9	24.1
30	22		1160	1170	91.0	93.0	84.6	81.3	76.9	73.6	70.5	44.5	42.3	40.8	38.5	37.9	35.2	29.4
40	30		1160	1170	91.7	94.1	111.1	106.8	101	96.6	92.6	58.5	55.6	53.5	50.5	49.8	46.3	38.6
50	37		1160	1170	91.7	94.1	138.6	133.3	126	120.5	115.5	72.9	69.3	66.8	63.0	62.2	57.8	48.2

由於本產品持續開發中，因此本公司保留隨時修改產品的設計、特性或是規格變更的權利，恕不另行通知。

Due to we continue to develop the products, we reserve the right to modify or improve the designs, features or specifications of our product at any time without notice.

JIA CHENG 25 配線圖 Wiring Diagram

《6 Output wire》

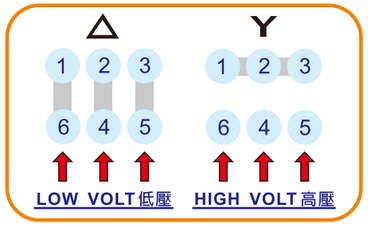

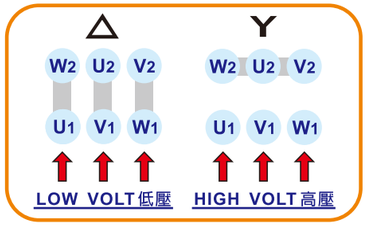

《9 Output wire》

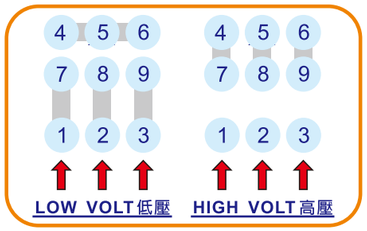

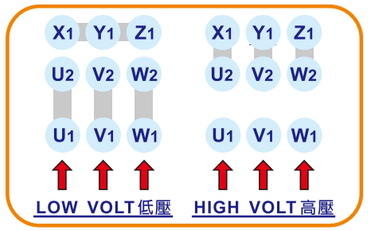

《12 Output wire》

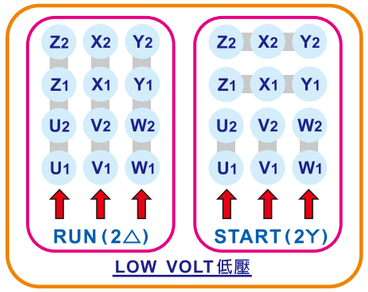

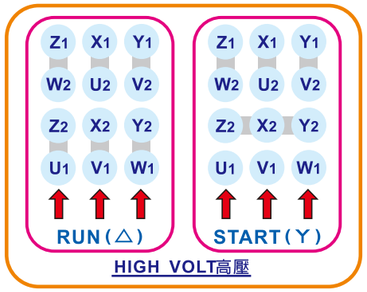

《單相 6 Output wire》

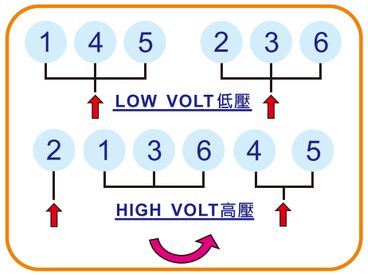

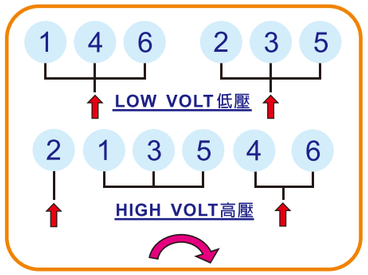

馬達裝配須知：

a.依照額定電壓配線。

b.請檢查三相電源電壓是否平均or欠相。

c.馬達通電運轉後，請檢查電流是否平均，運轉方向是否正確，運轉時是否有異音。

精緻雕琢　極致呈獻

佳晟電機股份有限公司
JIA CHENG ELECTRIC CO., LTD
42085台中市豐原區萬年路51號
No.51, WAN NIAN RD.,FENG YUAN DIST.,
TAICHUNG CITY, TAIWAN.
TEL:886-4-25233359
FAX:886-4-25278584
Http://www.jcmotor.com.tw

經銷商 Distributor:

※Copyright © 2025 Jia Cheng Electric Corp.,Ltd All Rights Reserved